AxSure™ Process and Equipment Information to Support Customer Permitting

Contents

AxSure™ Process and Equipment Information to Support Customer Permitting 1

1. Introduction and Scope 4
2. Technology Overview 4
3. System Components and Process Overview 6
4. Site Requirements 8
5. Permitting and Compliance 12
6. Analytical Measurements and Methods 12
7. Representative Prior Data 13
8. Summary 17
9. References 18

List of Figures

Figure 1. Water phase diagram showing the supercritical water region. 5
Figure 2. Automated Feed Management System (AFS) concept design for solid waste transferring, griding, and slurry preparation. 6
Figure 3. AxSure™ flow diagram for current SCWO process. 7
Figure 4. Example AxSure™ Site Layout

List of Tables

Table 1. Analytical methods for AxSure™ liquid inputs and/or outputs. 12
Table 2. Analytical methods for AxSure™ gas outputs. 13
Table 3. Typical gas analysis from SCWO gaseous effluent. 14
Table 4. Test parameter and associated measurements for SCWO test on AFFF destruction. (McDonough et al., 2022). 15
Table 5. Analytical results for the influent, quench, and liquid and gaseous effluents. 15
Table 6. Test parameters and associated measurements for various waste streams tested in a second pilot SCWO test. 16
Table 7. Analytical results for the various waste influent and liquid and gaseous effluents. 16

Acronym List

°C	Degrees Celsius
µ	Micron
µg/L	Microgram per Liter
AFFF	Aqueous Film Forming Foam
AFS	Automated Feed System
As	Arsenic
Avg	Average
Be	Beryllium
BTU/lb	British Thermal Unit per Pound
CA	California
$CaCO_3$	Calcium carbonate
Cd	Cadmium
cfm	Cubic Feet Per Meter
CFR	Code of Federal Regulations
CO	Carbon Monoxide
CO_2	Carbon dioxide
COD	Chemical Oxygen Demand
Conc	Concentration
Cr	Chromium
DRE	Destruction and Removal Efficiency
Eff	Effluent
FID	Flame Ionization Detector
Inf	Fahrenheit
IX	Ion Exchange
GAC	Granular Activated Carbon
GLS	Gas-liquid Separator
gpm	Gallons per Minute
H	Height
HC	Hydrocarbon
HCl	Hydrochloric Acid
HF	Hydrofluoric Acid
HFPO-DA	Hexafluoropropylene oxide dimer acid
HP	High pressure
HPAC	High Pressure Air Compressor
HRMS	High-Resolution Mass Spectrometry
Hz	Hertz
Inf	Influent
L	Length
lb	Pounds
LP	Low pressure
mg/DSCM	Milligrams per Dry Standard Cubic Meters
mg/L	Milligram per Liter
min	Minutes
MJ/kg	Mega Joules per kilogram
MPa	Mega Pascal
N_2	Nitrogen gas

NAAQS	National Ambient Air Quality
NaOH	Sodium hydroxide
NESHAP	National Emission Standards for Hazardous Air Pollutants
ng/DSCM	Nanograms per Dry Standard Cubic Meters
ng/L	Nanogram Per Liter
ng/m^3	Nanogram Per Cubic Meter
NO	Nitric oxide
O_2	Oxygen gas
Pb	Lead
PFAS	Per- And Polyfluoroalkyl Substances
PFBS	Perfluorobutanesulfonate
PFHxS	Perfluorohexanesulfonic Acid
PFNA	Perfluorononanoic Acid
PFOA	Perfluorooctanoic Acid
PFOS	Perfluorooctane Sulfonate
PID	Photoionization Detector
ppm	Parts per million
ppmv	Parts per million by volume
psig	Pounds per Square Inch Gauge
s	Seconds
Sb	Antimony
scfm	Standard cubic feet per meter
SCWO	Supercritical Water Oxidation
SO_2	Sulfur dioxide
SVOCs	Semi-Volatile Organic Compounds
TEQ	Toxic Equivalents
TDS	Total Dissolved Solids
TOC	Total Organic Carbon
TSS	Total Suspended Solids
USEPA	Unites States Environmental Protection Agency
V	Volts
VOCs	Volatile Organic Compounds
W	Width
wt%	Weight percentage

1. Introduction and Scope

AxNano's AxSure™ system combines an automated feed management system (AFS) with a supercritical water oxidation (SCWO) process to effectively destroy contaminants that persist through traditional wastewater treatment methods. The AFS is designed to optimize waste feed preparation and ensure a uniform and consistent input into the SCWO reactor. The SCWO reactor then uses high temperatures and pressures to completely break down organic contaminants into carbon dioxide, water, and inorganic salts, providing a clean and effective waste treatment solution as an alternative to landfilling and incineration.

This document provides detailed information on AxSure™ system components, operational requirements, and process outputs in support of site preparation and permitting efforts. While it does not outline specific permitting requirements, it offers essential technical data that aids in regulatory compliance, project planning, and system integration into existing or new waste treatment sites. This information is intended to assist environmental consultants, project managers, and general contractors in preparing for AxSure™ installation.

This work is supported by a Small Business Innovative Research contract FA864923P1125 where the objective of the program is to build, design and test our AFS prototype and demonstrate that it is a valuable component of an overall SCWO system by supporting continuous operations with a range of waste feed types. This document has been created to help support future technology commercialization and customer acquisition, which is a key mission of the Small Business Innovative Research program. Future customers will likely be environmental contractors or consultants that want to use SCWO for destruction of PFAS-containing wastes on behalf of their clients. The customers will have to apply for appropriate permits based on site location, waste type, and current regulations. Components of the permit application will be specific to our technology, and therefore those customers will need our input. This document includes representative prior data intended to provide insights into expected system performance, destruction efficiency, and operational parameters under real test conditions. These metrics support future customer permit processing, compliance documentation, and operational planning. By understanding these components and requirements detailed in this document, customers can better anticipate site logistics, address permitting challenges, and ensure successful deployment of AxSure™.

2. Technology Overview

AxSure™ technology utilizes Supercritical Water Oxidation (SCWO) to achieve complete destruction of organic contaminants by leveraging the unique properties of water in its supercritical state. When water is heated above its critical temperature (374°) and pressurized beyond its critical point (221 bar), it enters a supercritical phase where it behaves neither as a liquid nor a gas but as a dense fluid with exceptional solvating and diffusive properties (Figure 1). When this state is achieved, water exhibits some unique characteristics such as reduced hydrogen bonding, high diffusivity, zero surface tension, small dielectric constant, low viscosity, controllable dissociation constant, and excellent transport properties. Under these conditions, substances that are typically insoluble in water, such as oils and other organics, mix thoroughly with supercritical water, along with the oxidant and reaction byproducts. Any salts present will become non-soluble and fall out of solution.

The unique chemistries in the supercritical phase allow SCWO to destroy organic materials with higher efficiency than typical thermal treatment methods, such as incineration. The process involves introducing organic waste, water, an oxidant, and sometimes a fuel into a reactor operating at temperatures between 650°C and 700°C and pressures around 221 bar (~3,200 psig). The oxidant is

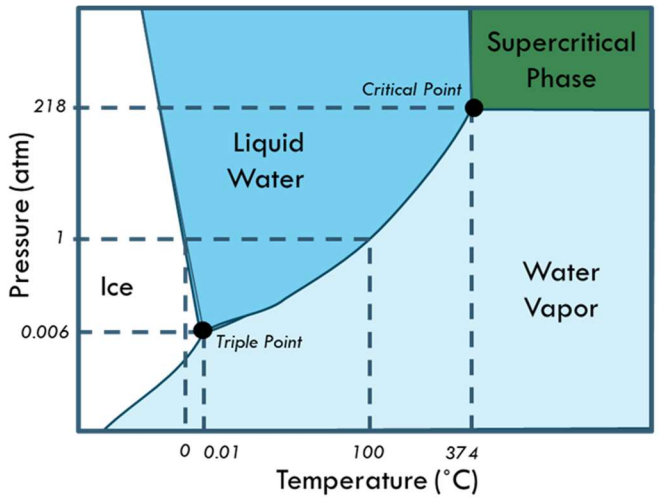

Figure 1. Water phase diagram showing the supercritical water region.

typically oxygen either in the form of oxygen gas or oxygen-enriched air. Our system uses oxygen-enriched air supply. While 374°C is the minimum temperature required for water to reach supercritical conditions, our SCWO systems typically operate at 650°C to promote higher contaminant destruction efficiency within short residence times of 10-12 seconds. (Sahle-Demessie, n.d.)

The single-phase environment of SCWO ensures rapid, homogeneous mixing, eliminating mass transfer limitations that are common in conventional processes, such as adsorption, chemical oxidation, and biological treatment. These conditions allow for the complete and efficient oxidation of any organic compound, reducing it to simple and unreactive byproducts including carbon dioxide, water, and inorganic salts. SCWO is particularly effective for disposing of hazardous substances in complex waste streams that are challenging for other technologies, making it an ideal solution for environmental remediation and industrial waste management applications. Examples of these waste streams include PFAS-impacted solids (GAC and resin), landfill leachate, reverse osmosis reject, still bottoms, and industrial waste where a mixture of contaminants may exist in high total organic carbon loading, high salt concentrations, or mixed phases of liquids and solids.

The AxSure™ unit has a total capacity of 3 gallons per minute (gpm), including water, fuel, and waste feeds combined. The feed nozzle is designed to ensure thorough mixing of the oxidant with the fuel, water, and waste feed at the reactor inlet. Throughput may be increased with modifications to the pumps and process. The system is designed for continuous 24 hours a day, 7 days a week operation, though actual runtime depends on factors such as unplanned shutdowns or changes in waste energy content.

The Automated Feed Management System (AFS) is designed to improve the operating efficiency of technologies like AxSure™ when managing solid and complex waste streams, ultimately supporting improved destruction efficiency. SCWO processes have specific boundary conditions for what the

waste feed must be in terms of chemical and physical properties. The AFS focuses on manipulating waste stream properties, such as reducing particle size, controlling solid-liquid ratios, and ensuring proper mixing, to create a uniform feed stream enabling continuous flow operation and enhancing waste destruction performance. By processing multiple waste streams to meet the feed parameters required of the SCWO process, the AFS supports reliable processing of diverse waste types without energy- and time-intensive shut-downs and start-up.

3. System Components and Process Overview

Solid and complex waste is processed through the AFS to create a slurry suitable for destruction technologies. A process flow diagram for the AFS is shown in Figure 2. A predetermined amount of solid or granular material is placed into a hopper, which feeds the material at a controlled rate into a mixing tank. There, it is combined with a specified amount of liquid to create a slurry with a defined solid-to-liquid ratio. The slurry is processed through a particle size reduction system and returned to

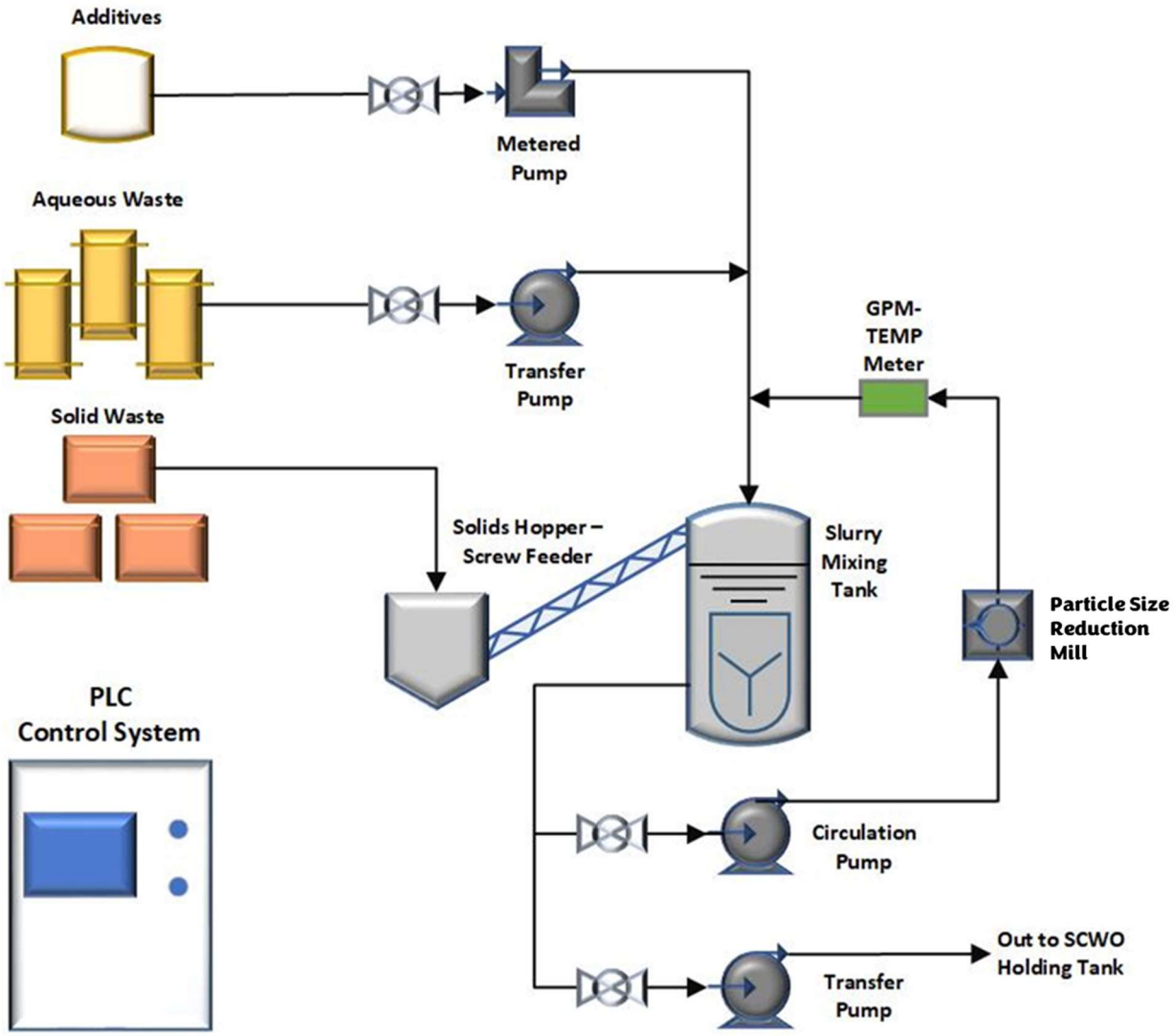

Figure 2. Automated Feed Management System (AFS) concept design for solid waste transferring, griding, and slurry preparation.

the mixing tank in a continuous loop, which ensures consistent particle size reduction and uniform distribution within the mixture. Adjustments of timing, pressure, and feed rates are made based on the composition and particle size of the initial material until the desired composition is achieved. Once the slurry reaches the target specifications, it is transferred to a holding tank before being introduced into the SCWO process.

Additional process equipment used for the AxSure™ process, following the AFS includes a high-pressure air compressor (HPAC), a fuel-fired preheater, a high-pressure SCWO reactor, a pressure letdown system, a low-pressure gas-liquid separator, chemical-resistant piping and connections, and holding tanks for influent waste and treated effluent. The system flow diagram is shown in Figure 3.

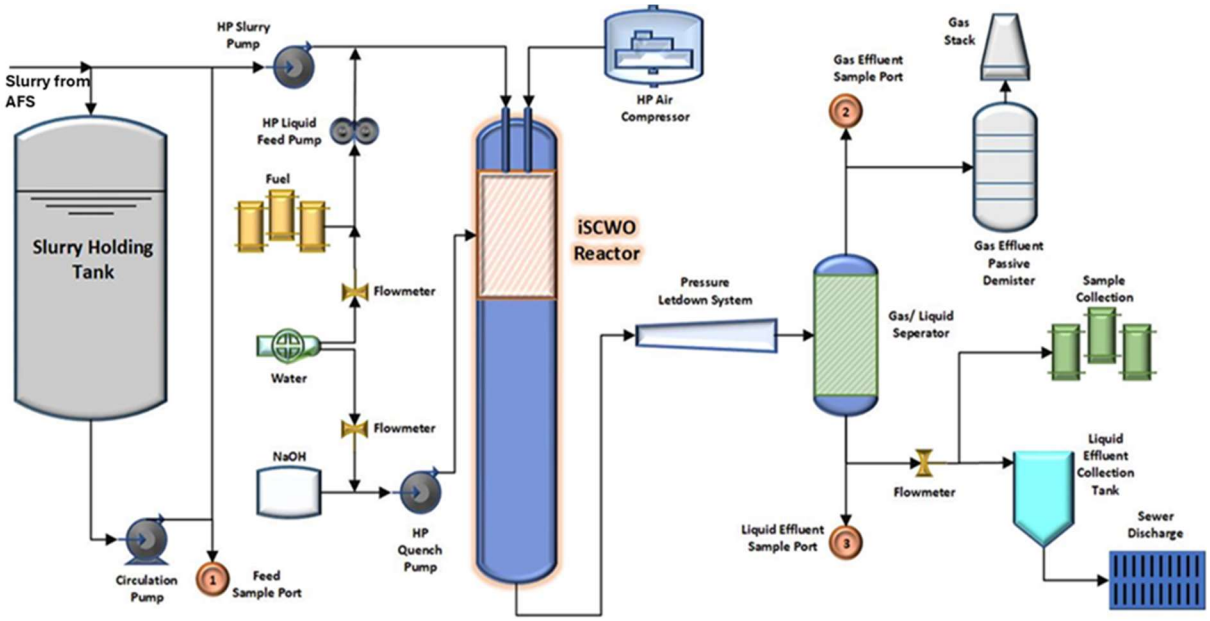

Figure 3. AxSure™ flow diagram for current SCWO process.

During normal AxSure™ operations, waste feed and water and/or fuel are injected into the high-pressure reactor through a top feed nozzle using a chemical injection pump for liquids and a slurry pump for solids (10-15%) prepared by the AFS system. The nozzle also supplies an oxidant, typically air. The air, waste, and diesel are mixed in a reaction zone maintained at 650°C, with the temperature regulated by an automated system that adjusts diesel flow as needed. Fuel such as a low-sulfur diesel is added when the waste's heating value is below ~5.1 MJ/kg (2,200 BTU/lb) to maintain sufficient reactor temperatures for high destruction efficiency. Alternatively, a second compatible waste stream can be blended to maintain the target energy content. If the energy content is higher, water will be added manually using the AFS to dilute the feed and prevent overheating of the reactor due to exothermic reactions. The reactor inlet pressure is set to 230 bar to ensure operating pressure remains above 200 bar, with variation influenced by flow rate, reaction kinetics, and temperature fluctuations.

Quench water flowing outside of the reactor, containing a 5-30% sodium hydroxide (NaOH) solution, is mixed with the effluent near the reactor's base to cool the liquid to ~300°C before entering the

pressure let-down system. The NaOH neutralizes inorganic acids such as hydrofluoric acid (HF) based on the input material analysis and real-time pH monitoring.

The quenched effluent exits through the reactor's pressure letdown system and then flows into a gas-liquid separator (GLS), where gas, mainly N_2, CO_2, O_2, and steam, is vented. The liquid is further cooled through a heat exchanger. The resulting liquid effluent, typically clean water with dissolved salts or metal oxides, is discharged from the system at around 55°C and collected in a storage tank. Permits required for corresponding air and water discharge are addressed in section 5 below.

4. Site Requirements

The customer is responsible for obtaining all required permits, preparing the site, and supplying the necessary infrastructure, utilities, and equipment to ensure the proper installation and operation of the AxSure™ system. This applies to a permanent setup; any differences for a temporary setup will be specified as needed. Below is a detailed breakdown of the requirements:

Site Preparation

- **Equipment Dimensions**:
  - Assembled AxSure™ system including SCWO and HPAC: 23 ft (L) × 8 ft (W) × 20 ft (H), weighing ~16,000 lb and 32,000 lbs, respectively (Note, height depends on stack requirements of site)
  - Assembled AFS system: 10 ft (L) × 6 ft (W) × 8 ft (H), weighing ~3,000 lb.
- **Land and Access**: Preparation of land and roads. The system should be installed on a level surface.
- **Concrete Infrastructure**:
  - Preparation of concrete for forming and pouring as required.
  - Approximately 6,000 sq ft of concrete:
    - Level 27 ft W x 75 ft L concrete pad for the AxSure™ system with an environmental canopy or metal shed for weather protection.
    - 30 ft W x 50 ft L concrete base for control room (small trailer).
- **Roads and Traffic Control**: Roads, fencing, signs, and traffic control.
- **Lighting**:
  - Indoor and outdoor lighting.
  - Lightning protection (grounding, lightning rods, or wire cables).
- **Enclosures**:

- Metal housing or shed over the AxSure™ system and associated equipment, with at least 30 feet of vertical clearance or an easily removable roof for maintenance.

Utilities

- **Electrical**:
  - Supply of 480V, 3-phase, 60 Hz, 600 amps.
  - Supply of 240V and 120V for permanent power source (generators for temporary setup if needed)
  - Breakers, disconnects, conduit, and wiring.
  - Distribution system for power to the AxSure™ system and associated equipment.
  - Standby diesel generator with automatic transfer switch (as needed).
- **Water**:
  - Water softener (if needed)
  - Supply of 10 gallons per minute of softened or demineralized water, conditioned to contain:
    - <250 µm filtration, <500 ppm total dissolved solids, and hardness <5 ppm as $CaCO_3$.
  - Storage tanks and piping to maintain continuous operation.
- **Fuel**:
  - Diesel fuel (low-sulfur #2) supply for the AxSure™ reactor and preheater.
  - Flow rate requirements:
    - AxSure™ reactor: Up to 0.4 gpm.
    - Preheater: 0.3 gpm during startup (approximately 30 minutes).
  - Fuel delivery line at 100 psig, -15 to 52°C (5 to 125°F).
  - Propane gas for the preheater's pilot flame (100-liter tank recommended).

Waste Feed and Effluent

- **Feed**:
  - Feed holding tank(s) (can be drums, totes, bladders, or frac tanks for liquids; drums, supersaks, or roll-offs for solids)
  - Waste feed input capable of delivering up to 3 gpm at 40±2 psig.
  - Waste must be maintained above freezing but below 52°C (125°F).

- **Liquid Effluent**:
    - Storage tanks with capacity to hold effluent volumes (if needed)
    - Stacks must have a discharge drain at the bottom of stack.
    - Gas-liquid separator drainage to effluent storage tanks.

Emissions and Compliance

- **Stack System**:
    - Two 20-ft stacks (or per local regulations), with discharge drains and demisters (if needed), extending above the edge of the canopy roof.
        - Stack diameter 12 inches
        - Air flow: dry air, 650 to 700 scfm
        - Gas velocity: 2,600 to 2,800 feet per minute
    - Scaffolding for inspection and sampling stations.
        - Air stack sampling requires two test ports at 15-20 ft at 90 degrees from each other.
        - Platform for stack inspections to take gas measurements (if needed)
    - Gas scrubbers for additional treatment (if needed)
- **Gas Effluent Emissions Monitoring (as a Testo Add-on)**:
    - Continuous emissions monitoring systems for CO, CO_2, O_2, NO_x, SO_x, HC, HF, HCl, and VOCs.
    - Calibration gases for gas detectors such as FIDs and PIDs.

Infrastructure and Housing

- **Control Room**:
    - A small trailer serving as a control room, equipped with a workstation, desktop computers, and monitors supplied by the customer.
    - Positioned no more than 50 feet from the AxSure™ skid.

Process Air

- **Air Supply**:
    - High-pressure air compressor capable of delivering 150 psi, 20 cfm demand.
    - Air dryer with <40 µm particle size, <1 ppm lubricant content, and dew point < -30°C.

Neutralization (if needed)

- **NaOH Supply**:
    - Storage for up to 50% sodium hydroxide solution to neutralize acids.
    - Metering pump system for NaOH delivery.

Equipment Design, Fabrication, and Inspection Codes

- Before the system is delivered to the client, a factory acceptance test is conducted, which involves powering the system and verifying that all components function properly at a basic level. Following this, the system customer validation test is performed, including coupling to the HPAC and operating the system for several hours using water and diesel fuel to verify the system is functioning as designed.
- The AxSure™ system and its components will comply with the following codes and standards:
    - Pressurized Equipment: American Society of Mechanical Engineers (ASME) Boiler & Pressure Vessel Code (BPVC).
    - Materials: American Society for Testing and Materials (ASTM)/ASME or fabricator standards.
    - Electrical Equipment and Wiring: National Electrical Code (NEC), National Fire Protection Association (NFPA) 70.
    - Rotating Equipment Safety: Occupational Safety and Health Administration (OSHA) standards.

In Figure 4, below, is an example site layout of the AxSure™ system and ancillary components.

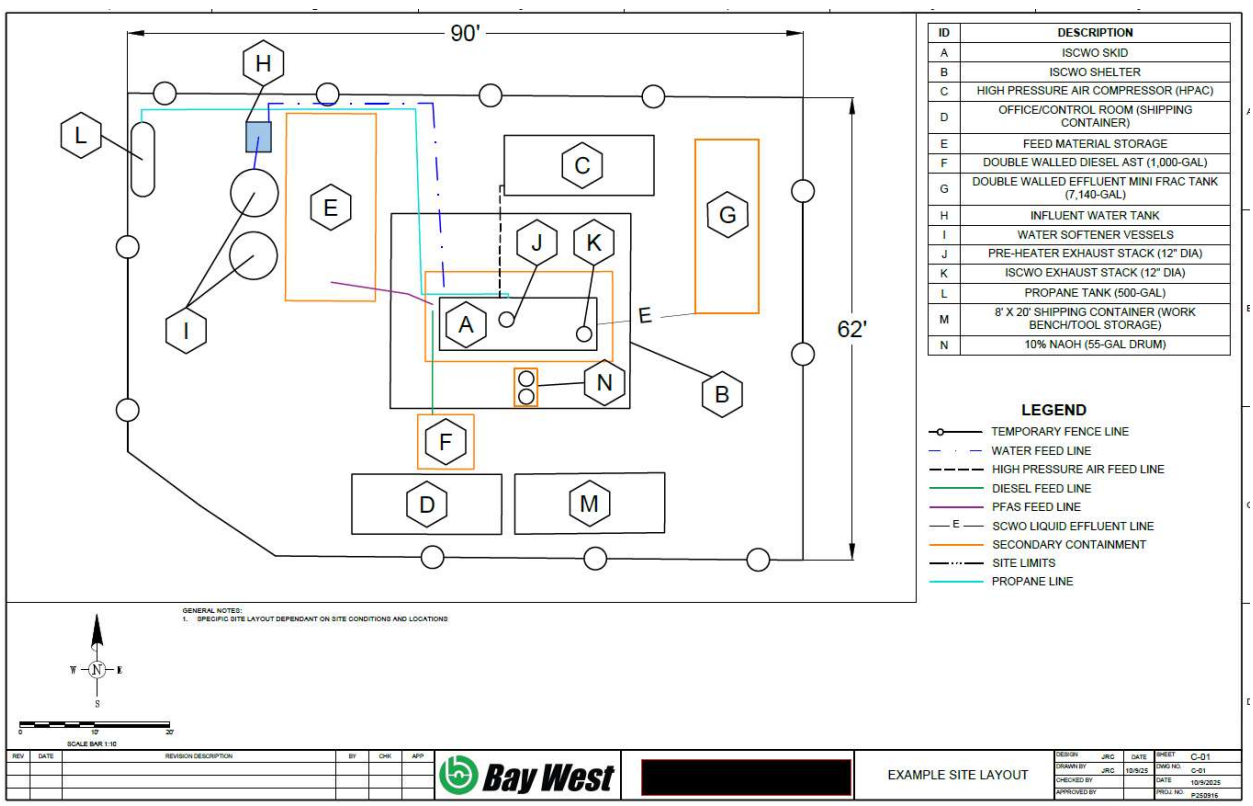

Figure 4: Example AxSure™ Site Layout

5. Permitting and Compliance

The customer is responsible for acquiring all necessary federal, state, and/or local permits for installation and operation of the AxSure™ system. Regulations regarding PFAS are ever changing, so customers should consult licensed and knowledgeable professionals. For example, CERCLA requires expeditious response to clean up contaminated areas. To ensure responses to identified release(s) of hazardous substances, pollutants, and contaminants occur quickly, CERCLA exempts response actions from the requirement to obtain federal, state or local permits related to any activities conducted completely on-site (USEPA, 1992). The U.S. Environmental Protection Agency (EPA) has clarified that surrogate or permit equivalency procedures should not slow the progress or increase the cost of CERCLA site remediation. However, if RCRA applies, then federal, state, and local permits would be required. Some examples of permits that may be required are listed below; however, this is not an exhaustive list, and it is the responsibility of the customer to ensure all applicable federal, state, and local permits are obtained for the system prior to installation and operation.

- Stormwater Permit
- Air Permit
- Electrical Permit
- Plumbing Permit
- Grading Permit
- Fencing/Signage Permit
- Heating Permit
- AST Installation Permit
- Building Permit
- Erosion Control Permit
- Hazardous Waste Storage Permit
- Construction General Permit
- Concrete footing/foundation/slab permit(s)
- National Pollutant Discharge Elimination System (NPDES) permit

6. Analytical Measurements and Methods

The following tables provide recommended standard measurements and analytical methods for measuring AxSure™ inputs and outputs. Table 1 details liquid parameters and corresponding analytical methods and Table 2 covers gas parameters and their respective analytical methods. Each measurement serves a specific purpose but is not limited to those listed and may vary according to federal, state, and local regulations. Specific measurements and methods depend on waste stream characteristics and compliance obligations for discharge and emissions. It is the responsibility of the customer to monitor all outputs required to comply with standards.

Table 1. Analytical methods for AxSure™ liquid inputs and/or outputs.

Parameter	**Analytical Method**	**Purpose**
Total Fluorine	Direct CIC	Efficiency, mass balance, regulation; important to know approximate F content for neutralization
Target PFAS	USEPA Method 1633	Contaminant of interest, mass balance, efficiency, regulation
Non-Target PFAS	HRMS	Contaminant of interest, mass balance, efficiency, regulation

TOP Assay	USEPA Method 1633	Contaminant of interest, mass balance, efficiency, regulation
VOCs	USEPA Method 8260C	Contaminant of interest, efficiency, regulation
SVOCs	USEPA Method 8270D	Contaminant of interest, efficiency, regulation
TOC	USEPA Method 9060A	Performance, process stability
COD	USEPA Method 410	Performance, process stability, proxy for waste energy content
Anions	USEPA Method 9056A	Efficiency, mass balance
Cations	USEPA Method 6010C	Performance, waste management
Metals	USEPA Method 6010C	Waste management, reactor corrosion
TDS	SM 2540C	Waste management
TSS	SM 2540D	Waste management
pH	USEPA 9040C	Waste management, process stability

Table 2. Analytical methods for AxSure™ gas outputs.

Parameter	**Analytical Method**	**Purpose**
Polar Semi Volatile PFAS	OTM-45 / TO-13 modified	Contaminant of interest, mass balance, efficiency, regulation
Non-Polar PFAS	OTM-50	Contaminant of interest, mass balance, efficiency, regulation
Non-Polar Semi Volatile PFAS	OMT-55	Contaminant of interest, mass balance, efficiency, regulation
VOCs	TO-15	Contaminant of interest, air regulation
Carbon dioxide	USEPA Method 3A	Compliance monitoring, carbon trading
Carbon monoxide	USEPA Method 10	Regulated by the Clean Air Act's NAAQS
Chlorine	USEPA Method 0050	NESHAP compliance monitoring
Hydrofluoric acid	USEPA Method 26	Compliance monitoring
Hydrogen sulfide	USEPA Method 11	Compliance monitoring
Lead	40 CFR Part 50	Regulated by the Clean Air Act's NAAQS
Methane	40 CFR Part 53	Compliance monitoring
Nitric oxide	USEPA Method 7E	Air regulation
Nitrogen dioxide	USEPA Method 7E	Regulated by the Clean Air Act's NAAQS
Oxygen	USEPA Method 3A	Performance, process stability
Ozone	40 CFR Part 53	Regulated by the Clean Air Act's NAAQS
Particulate matter	USEPA Method 5	Regulated by the Clean Air Act's NAAQS
Sulfur dioxide	USEPA Method 6C	Regulated by the Clean Air Act's NAAQS

7. Representative Prior Data

The following representative data from prior pilot system operations highlights typical influent and effluent characteristics. These values reflect performance under standard operating conditions for processing waste. The data will vary depending on specific waste streams and system configurations.

Typical gaseous effluent concentration for processing wastes primarily composed of carbon, hydrogen, oxygen, and nitrogen are listed on Table 3. Waste containing dissolved metals, halogens, or sulfur can produce oxides in the gaseous effluent, which may require additional treatment or control measures. Volatile organic compounds will likely be degraded in the reactor; however, if feasibility studies indicate otherwise, then gas phase abatement accessories can be added to the stack.

Table 3. Typical gas analysis from SCWO gaseous effluent.

Type of Emissions in Effluent Gas Stream	Characteristic Performance (no gas cleanup)
Dioxins/furans, ng/DSCM (TEQ)	< 0.006
Particulate matter, mg/DSCM	< 4
Toxic metals, mg/DSCM	< 0.015 for Cd + Pb < 0.015 for Sb + As + Be + Cr
Organics DRE, %	> 99.9999
HCl, ppmv	< 0.4
NO_x, ppm	< 1
SO_x, ppm	<1
CO, ppm	< 10
Hydrocarbons, ppm	< 10

A validation test was conducted at the General Atomics facility in San Diego, CA in March 2021(McDonough et al., 2022). Two continuous-flow test runs were performed, each lasting approximately 120 minutes. A 1000-fold diluted AFFF solution was used as the test material for this validation. The test parameters and associated measurements for both runs are summarized in Table 4. Note that total system effluent volumes are higher than influent volumes (including waste and diesel) due to the quench water system used for neutralization.

Table 5 shows the analytical results for PFOS (the major component of AFFF), PFHxS (the second highest constituent), and PFOA (another widely used PFAS). Concentrations are shown for the influent, quench, and liquid and gaseous effluents of Run 1 and 2. Also shown is the average destruction and removal efficiency (DRE), which is a measure used to evaluate the effectiveness of a treatment process in breaking down and removing contaminants from a waste stream. DRE is calculated as:

$$Destruction\ and\ Removal\ Efficiency\ = \frac{W_{in} - W_{out}}{W_{in}}$$

Where W_{in} and W_{out} are mass feed rate of a particular pollutant.

Table 4. Test parameter and associated measurements for SCWO test on AFFF destruction. (McDonough et al., 2022).

Test Parameter	**Run 1**	**Run 2**
Diesel consumed (L)	107	106
Diesel feed rate (lpm)	0.89	0.88
AFFF concentrate (L)	1.1	1.0
Influent AFFF (L)	1,085	997
Influent AFFF feed rate (lpm)	9.1	8.3
Liquid effluent volume (L)	1,359	1,301
Liquid effluent flow rate (lpm)	11.3	10.9
Quench volume (L)	2,844	2,768
Quench feed rate (lpm)	23.7	23.1
Influent air flow rate (lpm)	19,255	19,255
Influent air volume (L)	2,310,651	2,310,651
Run time (min)	120	120
Residence time (s)	10-11	10-11
SCWO temperature (°C)	649.1	648.5
SCWO pressure (MPa)	22	22
% Excess oxygen	10.6%	12.4%
pH post-Quench	6.16	6.05
Corrected stack flow rate (dscm)	20,181	19,512
Metered gas volume (dscm)	2.2	2.4
Water collected in sample train (L)	1.9	2.3

Table 5. Analytical results for the influent, quench, and liquid and gaseous effluents.

PFAAs	Liquid Influent results (ng/L)	Liquid Effluent results (ng/L)	Quench (ng/L)	Gaseous Sum ng/train	Gaseous Conc. ng/m^3	Avg DRE % (Run1 & 2)
Run 1						
PFOA	72,210	2.2	2.1	2.6	1.21	99.99434%
PFOS	10,780,000	5.6	4.3	3.4	1.57	99.99996%
PFHxS	717,100	1.67 J	1.52 J	1.6	0.72	99.99969%
Run 2						
PFOA	83,220	1.79 J	1.48 J	4.4	1.87	
PFOS	12,590,000	3.4	3.1	3.7	1.57	
PFHxS	855,600	1.44 J	0.914 J	1.9	0.80	

J, results are less than the reporting limit but greater than or equal to the method detection limit and the concentration is an approximate value.

Another pilot test of the SCWO system was conducted in August 2024 at the General Atomics facility in San Diego, California. The demonstration utilized four different waste streams: RO reject water, AFFF wastewater, spent GAC, and IX resin. The resulting test parameters and analytical results from

the test are summarized in Table 6 and 7. Note that for GAC and resin processing, no diesel fuel was used because the waste contained a high enough heating value to maintain the reactor temperature.

Table 6. Test parameters and associated measurements for various waste streams tested in a second pilot SCWO test.

Test Parameter	AFFF Wastewater	RO Reject	GAC	Resin
Diesel consumed (L)	149	144	0	0
Diesel feed rate (lpm)	1.1	0.6	--	--
Influent waste (L)	135	1,968	315	140
Influent waste feed rate (lpm)	1.0	8.2	7.0	7.0
Liquid effluent volume (L)	270	2,016	369	166
Liquid effluent flow rate (lpm)	2.0	8.4	8.2	8.3
Quench volume (L)	1,444	4,944	945	426
Quench feed rate (lpm)	10.7	20.6	21.0	21.3
Run time (min)	135	240	45	20
SCWO temperature (°C)	649.1	645.0	646.5	647.3
Reactor pressure (bar)	227.9	200.1	204.8	191.9
Process water (lpm)	4.3	0.6	3.7	5.6
pH post-Quench	8.57	7.55	7.69	6.82

Table 7. Analytical results for the various waste influent and liquid and gaseous effluents.

Test Parameter		AFFF Wastewater	RO Reject	GAC	Resin
Waste Description		Unknown diluted AFFF composition	RO reject from industrial wastewater treatment	Reactivated carbon waste from groundwater treatment	Purofine™ PFA 694E waste
Total PFAS (ng/L)		10,124	13,443	1,115,224	134,112
Normalized Effluent Total PFAS (ng/L)		414.4	45.4	50.4	1,991.3
Total Salt (mg/L)		2.7	2,508	257	268
Particle Size (μ)		Liquid	Liquid	98% <2,000	500-1,110
Total Effluent solids (wt%)		1.0%	0.5%	0.4%	0.2%
PFOA (ng/L)	Inf	120	68	69,000	7,100
	Eff	1.6	< 0.96	0.9	62
PFNA (ng/L)	Inf	< 48	< 5	1,400	230
	Eff	< 0.5	< 0.54	< 0.5	0.62
PFBS (ng/L)	Inf	170	2,200	3,900	2,600
	Eff	7.7	2.4	2.1	3.9
PFHxS (ng/L)	Inf	490	69	400,000	29,000
	Eff	6	1.9	< 0.8	8.7
PFOS (ng/L)	Inf	1,400	200	450,000	< 48
	Eff	20	4.3	5.2	< 0.61
HFPO-DA (ng/L)	Inf	< 120	< 12	< 50	< 120
	Eff	1.5	< 0.54	< 1.2	< 0.61
TOC (mg/L)	Inf	46	46	710	590

Test Parameter		AFFF Wastewater	RO Reject	GAC	Resin
	Eff	34	8.0	3.8	3.3
Sodium (mg/L)	Inf	23	2,000	100	180
	Eff	4,000	1,700	840	470
Cadmium (mg/L)	Inf	< 0.001	0.0054	< 0.0052	< 0.0052
	Eff	< 0.001	0.003	< 0.0052	< 0.0052
Chromium (mg/L)	Inf	< 0.0031	0.23	0.094	0.21
	Eff	0.42	0.18	0.24	0.11
Nickel (mg/L)	Inf	< 0.0022	0.65	0.11	0.14
	Eff	0.15	0.48	0.23	0.31
Lead (mg/L)	Inf	< 0.0073	0.08	< 0.037	0.044
	Eff	< 0.0073	0.04	< 0.037	0.11
1,4-Dioxane (µg/L)	Inf	< 3.0	6,500	< 8.5	< 8.5
	Eff	< 1.7	< 1.7	< 0.17	< 0.3
2-Butanone (µg/L)	Inf	890	21,000	< 250	< 25
	Eff	< 5.0	< 5.0	< 0.50	< 0.50
Benzene (µg/L)	Inf	<150	220	< 150	< 15
	Eff	< 3.0	< 3.0	< 3.0	< 0.30
Chloroform (µg/L)	Inf	< 3.0	< 150	170	< 15
	Eff	< 3.0	< 3.0	< 0.30	< 0.30
Trichloroethene (µg/L)	Inf	< 3.0	< 150	1300	130
	Eff	< 3.0	< 3.0	< 0.30	< 0.30
CO stack gas (mg/L)		1.17	0.50	1.14	1.67
NO stack gas (mg/L)		0.01	0.01	0.02	0.01
O_2 stack gas (mg/L)		18.06	14.6	14.24	14.11
NO_2 stack gas (mg/L)		0.01	1.10	0.04	1.47
SO_2 stack gas (mg/L)		0.02	0.01	0.02	0.02
CO_2 stack gas -Not measured					
Methane stack gas -Not measured					
Ozone stack gas -Not measured					
Particulate matter stack gas -Not measured					
Lead stack gas -Not measured					
Hydrogen sulfide stack gas -Not measured					
Chlorine stack gas -Not measured					

8. Summary

In summary, this document provides a comprehensive overview of AxSure™ system, detailing its components, operational requirements, and process outputs to support future customers efforts towards site preparation, permitting and system integrations efforts. The audience for this document includes environmental consultants or contractors that are overseeing AxSure™ installation on behalf of their clients. The AxSure™ system combines an automated feed management system (AFS) with a supercritical water oxidation (SCWO) process to effectively destroy contaminants, including PFAS, that persist through traditional wastewater treatment methods.

9. References

USEPA. (1992). *Permits and Permit "Equivalency" Processes for CERCLA On-site Response Actions*. https://semspub.epa.gov/work/11/174423.pdf

McDonough, J. T., Kirby, J., Bellona, C., Quinnan, J. A., Welty, N., Follin, J., & Liberty, K. (2022). Validation of supercritical water oxidation to destroy perfluoroalkyl acids. *Remediation*, *32*(1–2), 75–90. https://doi.org/10.1002/REM.21711

Sahle-Demessie, E. (n.d.). *Industrial SCWO for the Treatment of PFAS/AFFF Within a Water Matrix*. www.epa.gov/research